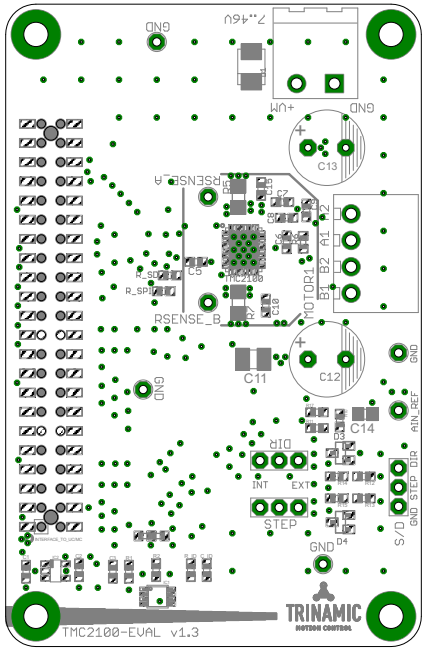

Silkscreen Top