TRINAMIC

MOTION CONTROL

TMC262-LA STEPPER MOTOR PRE-DRIVER

Product Training Module (PTM)

TMC262 – GETTING STARTED

The TMC262 is a pre-driver for two-phase stepper motors.

The TMC262 offers an industry-leading feature set, including high-resolution micro-stepping, sensorless mechanical load measurement, load-adaptive power optimization, and low-resonance chopper operation. Standard SPI™ and STEP/DIR interfaces simplify communication.

The TMC262 drives four external N- and P-channel dual MOSFETs for motor currents up to 8A and up to 60V. Integrated protection and diagnostic features support robust and reliable operation.

Typical applications:

Textile, Sewing Machines / Factory Automation / Lab Automation / Liquid Handling / Medical / Office Automation / Printer and Scanner / CCTV, Security / ATM, Cash recycler / POS / Pumps and Valves / Heliostat Controller / CNC Machines

GENERAL SYSTEM ARCHITECTURE

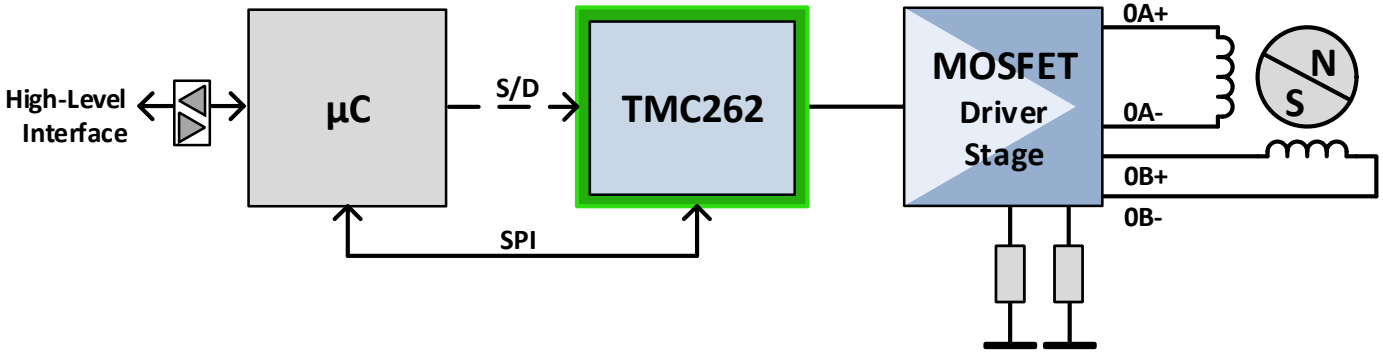

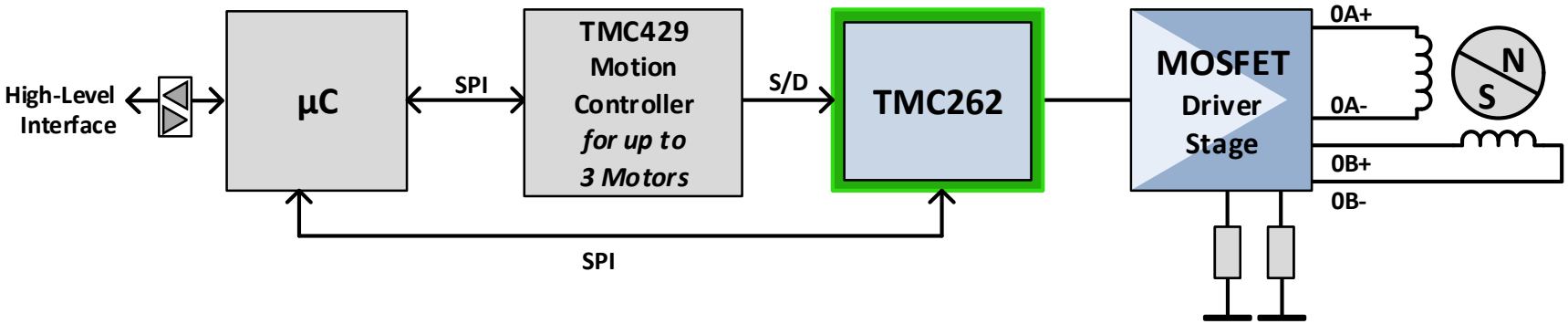

WHAT IS REQUIRED FOR A STANDARD SETUP?

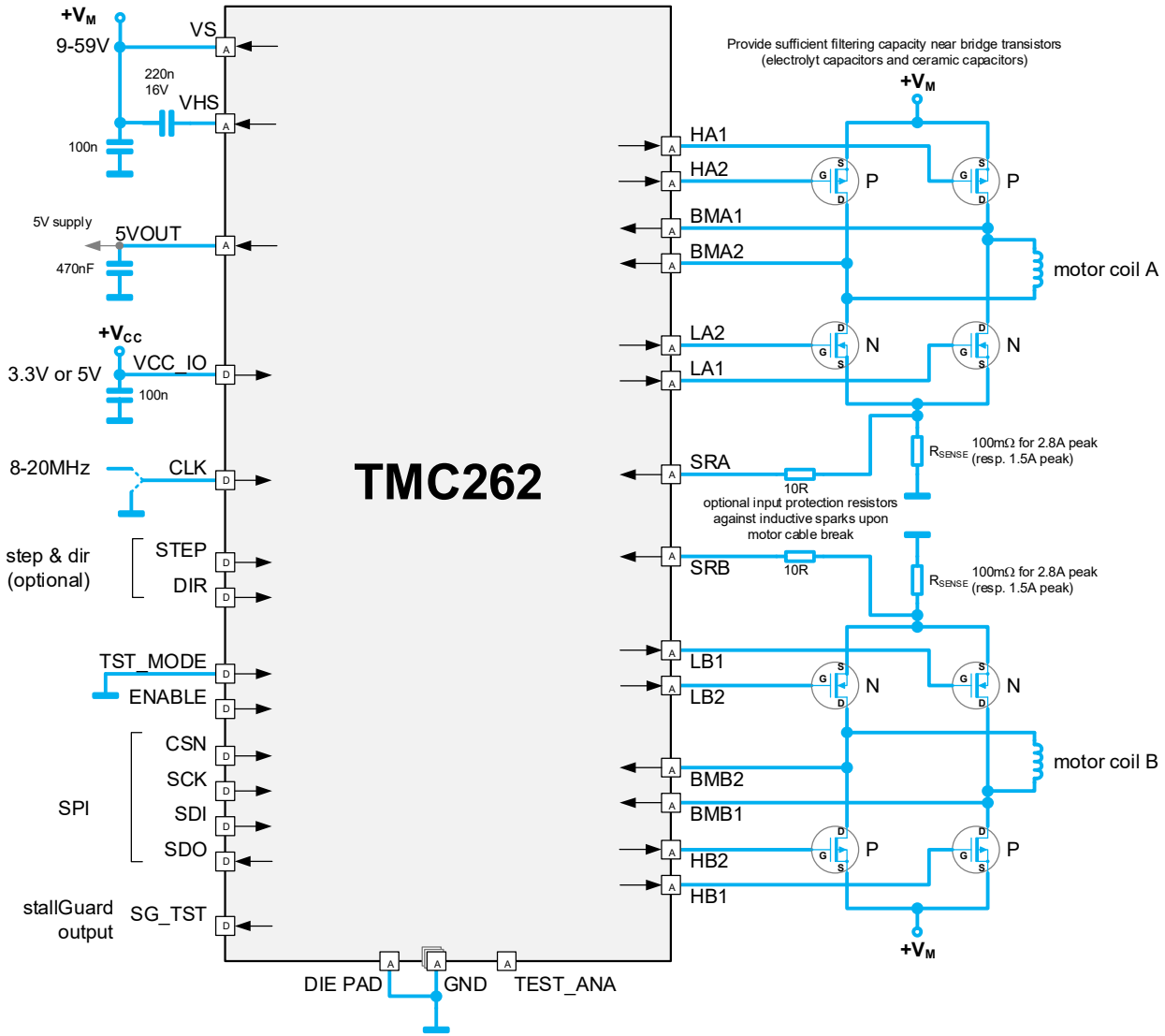

HOW TO SELECT R_{SENSE}?

$$R_{sense} = \frac{248}{256} * \frac{(CS+1)}{32} * \frac{V_{FS}}{I_{rms}} * \frac{1}{\sqrt{2}}$$

$$P_{RSMAX} = \frac{\left(V_{FS} * \frac{CS+1}{32}\right)^2}{R_{SENSE}}$$

Use `CS = 31` and `VSENSE = 0` ($V_{FS} = 310mV$), and your required absolute maximum RMS current for calculation.

Example: $I_{RMS} = 2.1A$

$\rightarrow R_{sense} = 99.5m\Omega \approx 100m\Omega$

$\rightarrow P_{RSMAX} = 0.961W$

HOW TO SELECT MOSFETS?

1. Select an appropriate Motor voltage range
2. Gate Charge $Q_{GD} < 20nC$ at $5V$
3. Threshhold Voltage $1V < V_{TH} \ll 5V$
4. Select $R_{DS_{ON}}$ according to the required gate current and acceptable powr dissipation at the power stage.
5. Check if the nominal current rating of the MOSFET manufacturer matches your requirements

Use the TMC262 spreadsheet to calculate power dissipation of the TMC262 driver *stage* with your application and MOSFET parameters: download link

INTERNAL OR EXTERNAL CLOCK?

- Internal CLK is ca.15 MHz / external CLK range: 4MHz to 20 MHz
- Why using internal CLK ?
  - Standalone operation, save extra CLK source, good choice for most applications
- Why using external CLK ?
  - For well defined precise motor chopper operation, an external clock source with stable and known frequency is suggested
  - Higher CLK frequency allows for faster step rates, faster SPI operation, and higher chopper frequencies but may also cause more electromagnetic emission and more power dissipation.
  - Use same CLK base as other ICs in the application
  - Can be derived from a microcontroller, does not require extra part
- If the application can tolerate reduced motor velocity and increased chopper noise, a clock frequency of 4MHz to 10MHz should be considered.
- Generally, a system clock frequency of 10MHz to 16MHz should be sufficient for most applications.
- A chopper frequency > 16MHz is suggested when operating a motor at the highest velocities.

TMC262 - BOM EXAMPLE

Typical Setup for 48V supply voltage and 2.1A (RMS) Phase-Current

PCS	POS	Name/ Type	Value	Digi-Key Part #
1	IC1	TMC262-LA		1460-1044-ND
2	R1,R2	SMD Sense Resistor	100 mΩ, 1W, 1%	311-0.1ARTR-ND
4	T1, T1, T3, T4	AO4612	MOSFET N/P	785-1041-2-ND
1	C1	Ceramic Capacitor	220nF/16V	399-5619-2-ND
1	C2	Ceramic Capacitor	100nF	399-7371-2-ND
1	C3	Ceramic Capacitor	470nF	399-4922-1-ND
2	C4, C5	Ceramic Capacitor	100nF/63V	311-1523-2-ND
1	C6	Electrolyte Capacitor	220µF/63V	P5194-ND

TMC262 – SAMPLE LAYOUT

Placement:

- Sense resistors should be placed close to the MOSFETs and close to the driver IC (green)
- Place filter capacitors as close as possible near the driver‘s interface pins (blue).
- Focus on a symmetric placement and layout for sense resistors and MOSFETs

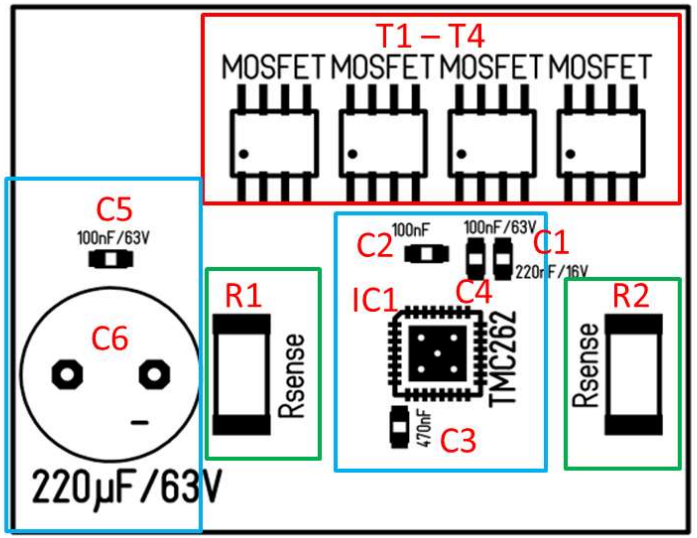

TMC262 – SAMPLE LAYOUT

Ground connections

- For optimum cooling and ground connection a 4 Layer Design is recommended
- use one layer as solid GND plane
- Package bottom pad connected to all GND pins
- Use a couple of vias to GND layer for bottom pad
- Use the bottom layer for cooling areas for the MOSFETs and signal routing

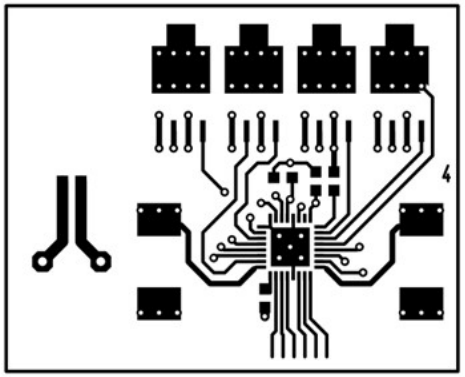

Top layer (assembly side)

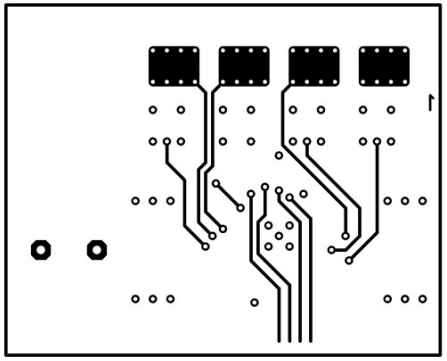

Bottom layer

TMC262 – SAMPLE LAYOUT

Sense Resistor Connection

- Use vias at sense resistor terminals to GND layer
- Use wide / short traces with only less bends to the full bridge foot points
- The two sense resistors should NOT share a common ground connection trace.
- No current other than the sense resistor currents should flow through their connections to ground

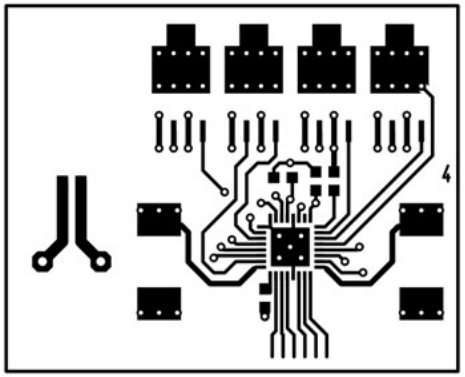

Top layer (assembly side)

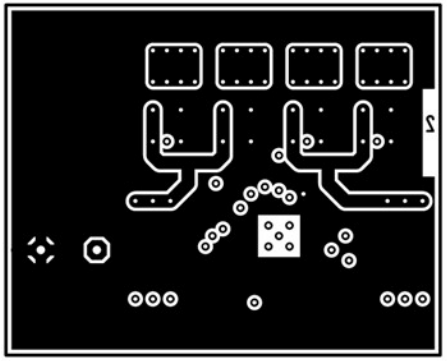

V_m layer

TMC262 – SAMPLE LAYOUT

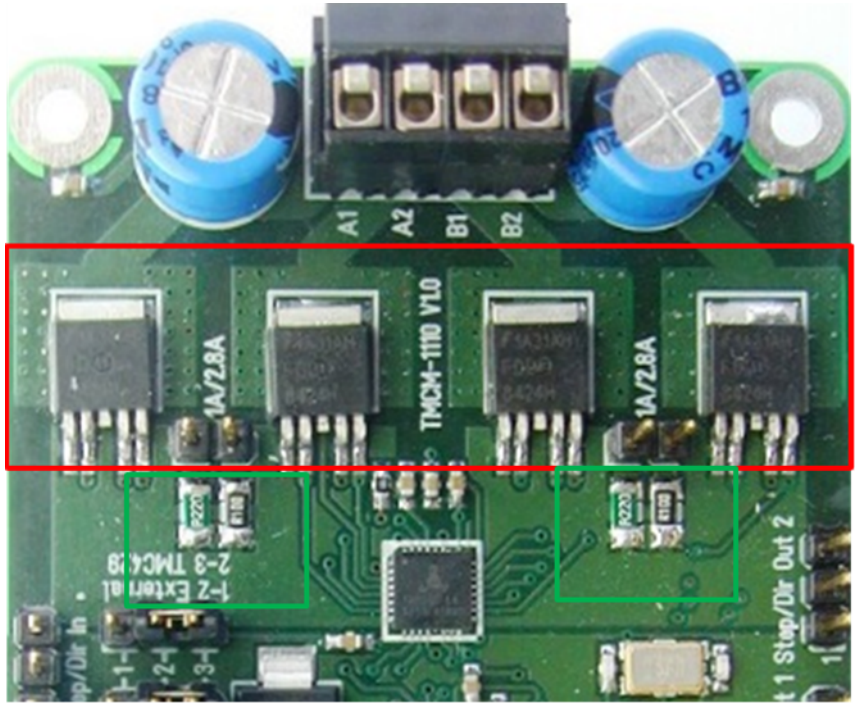

top layer (assembly side)

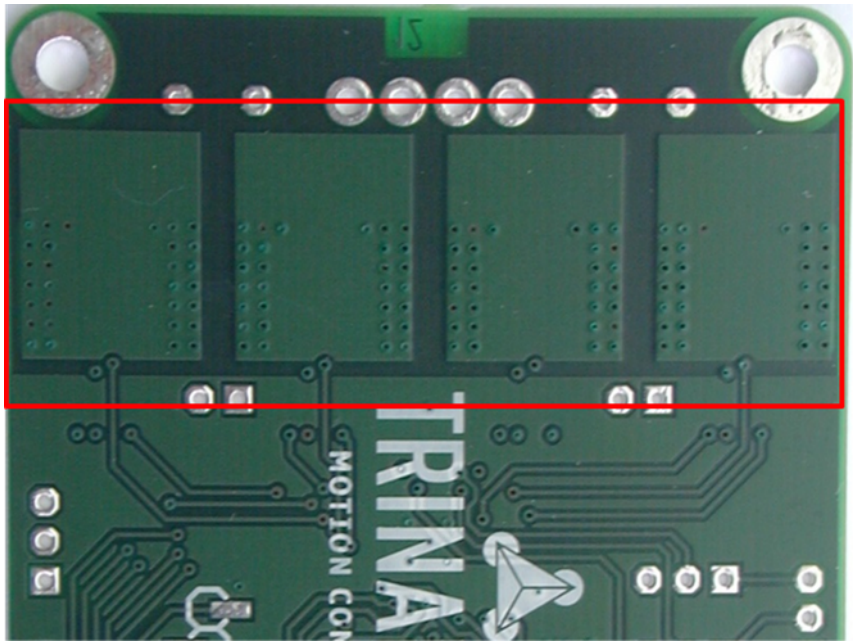

bottom layer (solder side)

TMC262 – INITIAL CONFIGURATION

Chopper control register (CHOPCONF):

```
SPI = $901B4          // Use hysteresis mode chopper
```

stallGuard2 and current control register (SGCSCONF):

```
SPI = $D001F          // Current setting: $d001F (maximum current)
```

Driver control register (DRVCONF):

```
SPI = $EF010          // high gate driver strength, stallGuard read, SDOFF=0
```

Driver control register (DRVCTRL):

```
SPI = $00000          // 256 microstep setting
```

coolStep control register (SMARTEN):

```
SPI = $A8202          // enable coolStep with minimum current = ¼ of max. I
```