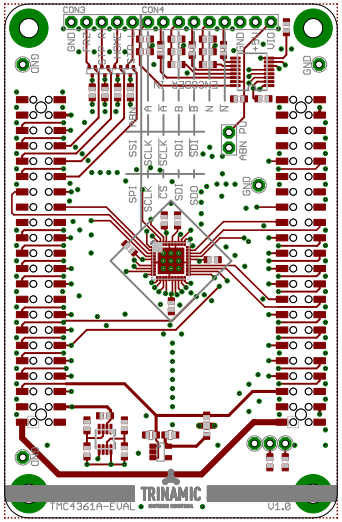
CON3
CON4
GND
GND
GND